silen SPACE

Silen Space Meet 2

Collaboration space for allies

This stylish pod filters out the world, its noise and distractions. Comfortable for two (but fits four for shorter meetings), shared purpose turns into real focus here. Meet, create, and collaborate.

1–2 person

Timeless design excellence
A precise blend of engineering quality and top-level design expertise. Light, refined, and created to fit naturally into any environment.

Ultimate two-way privacy
Premium level noise reduction that provides complete acoustic privacy in both directions.

Comfort perfected
Airflow that exceeds office standards, advanced ventilation and EchoFree Gen 2 acoustics. Ergonomic furniture, preset lighting modes, full personal control.

Flexibility redefined
A lighter structure, compact modules, fast and easy assembly, easy relocation, and long-lasting durability. Built to adapt as needs change.

Endless customization
Silen Dynamics allows both interior and exterior finishes to be easily swapped. Furniture is replaceable, accessories can be added later, and pods stay fresh for years.

Sustainability at the core
Responsible materials, high recyclability, reduced emissions, and a structure designed for more than 20 years of renewability and circular use.

Interior colors

Floor

Exterior colors

Veneered exterior colors

Textile colors for exterior

n-co.nl/silen

silen SPACE

Silen Space Meet 2

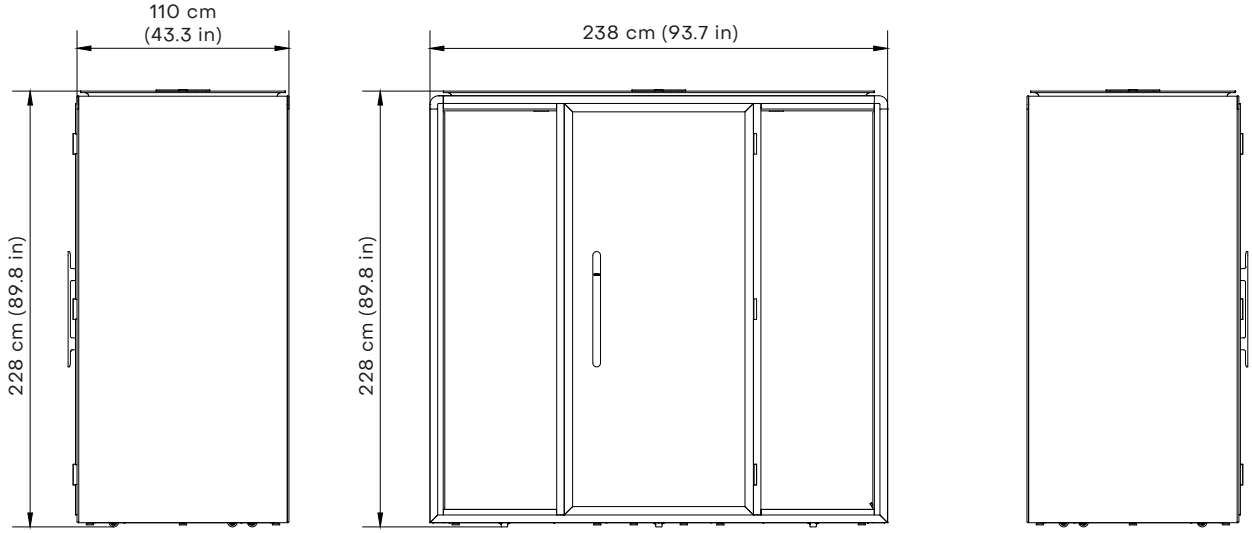

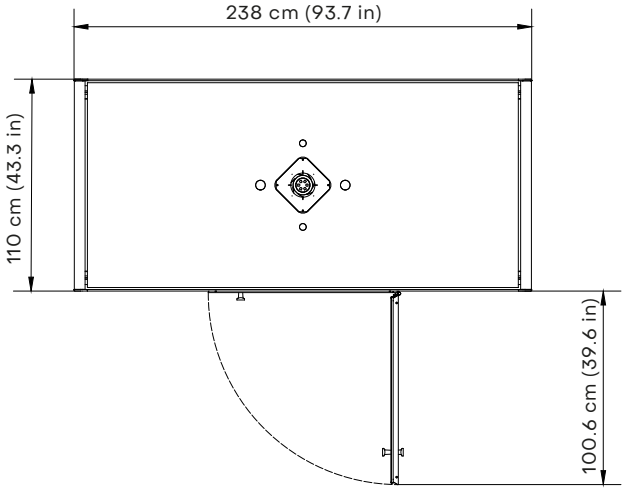

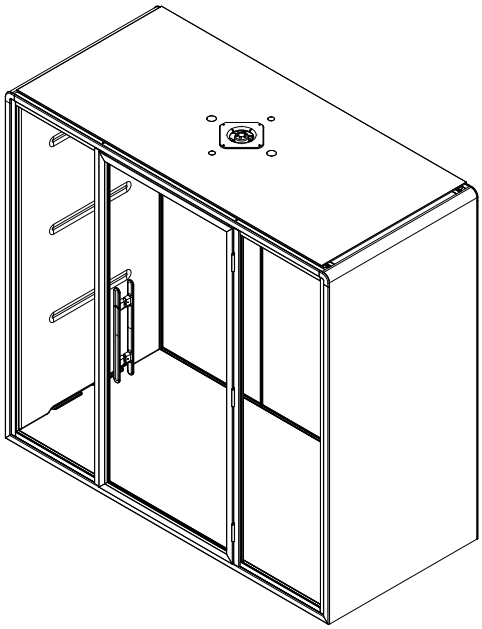

n-co.nl/silen

silen SPACE

Space Meet 2 general product info

MEASUREMENTS	
Exterior size (W×D×H)	238 × 110 × 228 cm / 93.7 × 43.3 × 89.8 in
Interior size (W×D×H)	223 × 105 × 208 cm / 87.8 × 41.3 × 81.9 in
Weight (net)	556 kg / 1225 lb

MATERIALS	
Exterior	Metal sheet with sand-structured powder coating. Fixed with magnets and easily exchangeable.
Trims	Black powder-coated aluminium
Interior (walls and ceiling)	EchoFree 2.0 non-woven felt panel covered with Camira RePlay Zero textile (flammability Class B, s1, d0)
Floor carpet	Carpet for public spaces, EN 1307. Flammability Bfl-s1
Glass	12mm Sound Control laminated safety glass.
Walls and structure	Sandwich element and structure of aluminium, birch plywood, rubber mat and isolation materials

TECHNICAL FEATURES	
Door handedness	Right- or left-handed door
Adjustable glides	Levelling from inside the booth
Casters	Patented hidden caster system enables smooth installation and effortless relocation. Casters are easily activated from inside the pod.
Sprinkler and fire alarm	Built in readiness to install sprinkler, fire alarm or stand-alone fire suppression system

TECHNOLOGY	
Ventilation	Automatic low energy-consumption air circulation system with boost mode.
General light	Dimmable automatic task and ambient LED lights with preset modes to ensure sufficient and proper lighting for various tasks. Light temperature 2700-5000K
Control Panel	Integrated Control Panel for dimming lights, ventilation and other functions of the booth
Occupancy Light	Automatic occupancy notification light outside of the pod, controlled by presence sensor
Power outlet	• Sockets on the tabletop of optional Integrated Table • Possibility to add and retrofit up to 6 sockets on the wall • No sockets in standard
Power cord	4 m long cord, connection either from the top or bottom of the pod (can be chosen during installation)

Space Meet 2 general product info

FURNITURE AND EXTRAS

Table options	• Integrated table with bracket on tabletop for up to 3 sockets – Tabletop size 70 x 65 cm, height 75 cm – Socket options on the tabletop (up to 3) *1. Power outlet (110-230V)* *2. USB-A/C power outlet (5V @ 15W)* *3. CAT6 socket (including CAT6 cable coming out from the booth)* • No table (no sockets on the floor, option to add sockets on the wall)
Seating options	• Elegant and comfortable SPACE sofas with armrest on one side • Simple yet functional VEGA sofas for comfortable seating • No seating
Screen mount options	• Swivelling and movable screen mount with power cable, fixed to the Integrated Table (fixed to the middle power bracket on the tabletop) • Screen bracket on the side wall, height can be chosen during installation • No screen bracket
Seismic kit	Optional seismic kit for anchoring booth to the floor
Ventilation inlet filter	Filter which can be mounted on top of the fan to create a cleaner environment inside the booth
Frosted glass	Frosted film between glasses. Cannot be removed or retrofitted

CERTIFICATION

Sound reduction	Certification in process
General safety	GS-mark in process / UL962 in process
Electrical safety	CE-mark / UL962 is in process
Emissions	Indoor Advantage™ Gold certified by SCS Global Services
Flammability	Certification in process
Sustainability	Design-Phase EPD in process
Recyclability	Design-Phase EPD in process

Space Meet 2 colors and materials

EXTERIOR

Standard exterior colors

Chalk White
RAL 9010

Charcoal Black
RAL 8022

Cotton Grey
RAL 080 80 05

Trims

Charcoal Black
RAL 8022

Veneered exterior colors

Natural Oak
ALPI Vienna Oak Striped 10.50

Grey Oak
ALPI Breeze Oak 10.69

Light Oak
ALPI Xilo Ice Striped 10.53

Premium exterior colors

Blush Pink
RAL 030 70 10

Sand Yellow
RAL 090 80 40

Stone Grey
RAL 100 70 10

Sage Green
RAL 120 60 20

Taupe Grey
RAL 060 50 05

Clay Red
RAL 030 30 40

Sky Blue
RAL 240 50 20

Ink Blue
RAL 280 20 15

Textile colors for exterior (Camira RePlay Zero)

Black
ZER33

Dark Grey
ZER29

Light Grey
ZER26

Navy Blue
ZER02

Slate Blue
ZER01

Eucalyptus Green
ZER07

Moss Green
ZER12

Honey Yellow
ZER17

Dusty Red
ZER20

Powder Pink
ZER15

Cool Beige
ZER25

INTERIOR

Interior walls & ceiling

Cool Beige
ZER25

Dark Grey
ZER29

Floor

Dark Grey
Lano Miri Mir 0820

Sockets & accessories

Black

Space Meet 2 colors and materials

FURNITURE

Table tops

White HPL

Matte Black HPL

Natural Oak
ALPI Vienna Oak Striped 10.50

Legs and fittings for furniture

Charcoal Black
RAL 8022

Standard textile colors for seating (Camira RePlay Zero)

Black
ZER33

Dark Grey
ZER29

Light Grey
ZER26

Premium textile colors for seating (Camira RePlay Zero)

Navy Blue
ZER02

Slate Blue
ZER01

Eucalyptus Green
ZER07

Moss Green
ZER12

Honey Yellow
ZER17

Dusty Red
ZER20

Powder Pink
ZER15

Cool Beige
ZER25